Installation instruction Multi Flash SB

No time for manuals? No problem, this will only take a few minutes of your time to read it and the installation of your new Multi Flash SB is done fast and easy :-)

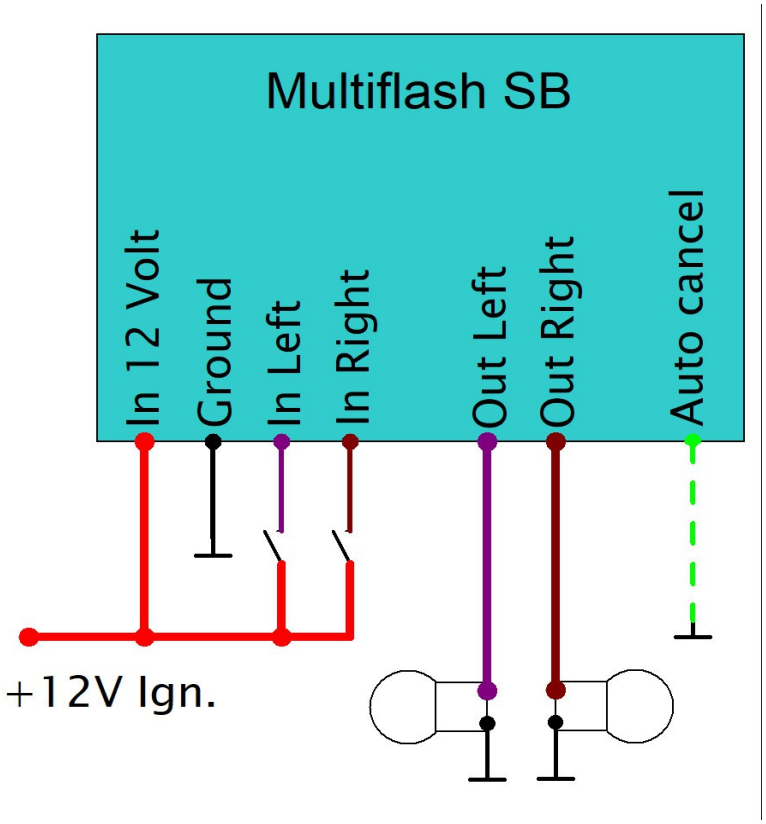

Color	Describtion
Violet (thin)	Switch input for the left flasher. Just connect it to the left side of the indicator switch and wire the middle cable to plus 12 Volt.
Brown (thin)	Switch input for the right flasher. This cable is wired to the right side of the switch. Btw, a fast change between left and right will activate an emergency flasher function.
Green	You can activate an auto cancel function by wiring the green cable to ground. This will switch off the indicators after 40 flashes.
Red (thick)	+ 12 Power
Violet (thick)	Output left flasher
Brown	Output right flasher
Black	Ground

Note:

The outputs can control all kind of 12 Volt led flashers and "traditional" halogen bulbs up to 60 Watt per side. **Please note that the Multi Flash SB is made for installation in the handle bar or in the head light. An installation somewhere else at the bike with a short distance to the ignition result sometimes in "funny" unwanted functions of the Multi Flash SB due to electrostatic disturbances.**

The Multi Flash SB should be installed by professional well trained engineers. Please check your local regulations regarding the traffic light rules in your country before use the Multi Flash SB in your bike. Please be aware that we are not responsible for any hazards, damages or disadvantages due to the use of this device. We also declare that the Multi Flasher SB is conform to the CE and ROHS regulations for the European market.

We tried to keep the functions of the Multi Flash SB and this manual as simple as possible. However, please don´t hesitate to contact us at info@elektronikbox.de if you have any questions during the installation.

We wish you to have a lot of fun with your new Multi Flash SB in your bike and of course always Ride Safe!